DRC

PZ23-12000026

12/04/2024

PROTECTION OF POTABLE WATER SUPPLY NOTES

A. GENERAL

IN ADDITION TO THESE REQUIREMENTS, ALL POTABLE WATER MAINS CONSTRUCTED IN THE VICINITY OF STORM SEWERS, SANITARY SEWERS OR FORCE MAINS SHALL COMPLY WITH THE APPLICABLE PROVISIONS OF FLORIDA ADMINISTRATIVE CODE CHAPTER 62–555, GREAT LAKES–UPPER MISSISSIPPI RIVER BOARD OF STATE SANITARY ENGINEERS (GLUMRB) "RECOMMENDED STANDARDS FOR WATER WORKS", AND GLUMRB "RECOMMENDED STANDARDS FOR WASTEWATER FACILITIES".

B. DEFINITIONS

FOR THE PURPOSES OF THIS SPECIFICATION, THE WORDS "OTHER PIPE" OR "OTHER PIPES" SHALL MEAN SANITARY SEWER MAIN, SEWAGE FORCE MAIN, STORMWATER MAIN OR ANY COMBINATION THEREOF.

C. CROSS CONNECTIONS PROHIBITED

THERE SHALL BE NO PHYSICAL CONNECTIONS BETWEEN A PUBLIC OR PRIVATE POTABLE WATER SUPPLY SYSTEM AND ANY OTHER PIPE OR APPURTENANCE THERETO WHICH WOULD PERMIT THE PASSAGE OF ANY WASTEWATER, POLLUTED WATER, OR ANY OTHER WATER INTO THE POTABLE SUPPLY. NO WATER PIPE SHALL PASS THROUGH OR COME INTO CONTACT WITH ANY PART OF A SANITARY SEWER MANHOLE OR STORMWATER MANHOLE.

D. RELATION OF OTHER PIPES TO POTABLE WATER MAINS

1. HORIZONTAL SEPARATION

A. NEW OR RELOCATED, UNDERGROUND WATER MAINS SHALL BE LAID TO PROVIDE A HORIZONTAL DISTANCE OF AT LEAST THREE FEET BETWEEN THE OUTSIDE OF THE WATER MAIN AND THE OUTSIDE OF ANY EXISTING OR PROPOSED STORM WATER, STORM WATER FORCE MAIN, OR PIPELINE CONVEYING REUSE WATER NOT REGULATED UNDER PART III OF CHAPTER 62–610,F.A.C.

B. NEW OR RELOCATED, UNDERGROUND WATER MAINS SHALL BE LAID TO PROVIDE A HORIZONTAL DISTANCE OF AT LEAST THREE FEET, AND PREFERABLY TEN FEET, BETWEEN THE OUTSIDE OF THE WATER MAIN AND THE OUTSIDE OF ANY EXISTING OR PROPOSED VACUUM–TYPE SANITARY SEWER.

C. NEW OR RELOCATED, UNDERGROUND WATER MAINS SHALL BE LAID TO PROVIDE A HORIZONTAL DISTANCE OF AT LEAST SIX FEET, AND PREFERABLY TEN FEET, BETWEEN THE OUTSIDE OF THE WATER MAIN AND THE OUTSIDE OF ANY EXISTING OR PROPOSED GRAVITY–OR PRESSURE–TYPE SANITARY SEWER, WASTEWATER FORCE MAIN, OR PIPELINE CONVEYING REUSE WATER NOT REGULATED UNDER CHAPTER 62–610, F.A.C. THE MINIMUM HORIZONTAL SEPARATION DISTANCE BETWEEN WATER MAINS AND GRAVITY TYPE SEWERS SHALL BE REDUCED TO THREE FEET WHERE THE BOTTOM OF THE WATER IS LAID AT LEAST SIX INCHES ABOVE THE TOP OF THE SEWER.

ENGINEERING STANDARDS 2019

REVISIONS				
BY	DATE	ENGINEERING DIVISION CITY OF POMPANO BEACH	POTABLE WATER SUPPLY NOTES	
S.S.	01/12	SCALE: N.T.S.		DATE: JAN. 2012 DWG. NO. 122-2

J:\City-STANDARDS\2019 Standards Details\Water 1-4.dwg, 11/2/2018 2:55:57 PM

D. NEW OR RELOCATED, UNDERGROUND WATER MAINS SHALL BE LAID TO PROVIDE A HORIZONTAL DISTANCE OF AT LEAST TEN FEET BETWEEN THE OUTSIDE OF THE WATER MAIN AND ALL PARTS OF ANY EXISTING OR PROPOSED "ON-SITE SEWAGE TREATMENT AND DISPOSAL SYSTEM".

2. VERTICAL SEPARATION

A. NEW OR RELOCATED, UNDERGROUND WATER MAINS CROSSING ANY EXISTING OR PROPOSED GRAVITY–OR VACUUM–TYPE SANITARY SEWER OR STORM SEWER SHALL BE LAID SO THE OUTSIDE OF THE WATER MAIN IS AT LEAST SIX INCHES, AND PREFERABLY 12 INCHES, ABOVE OR AT LEAST 12 INCHES BELOW THE OUTSIDE OF THE OTHER PIPELINE. HOWEVER, IT IS PREFERABLE TO LAY THE WATER MAIN ABOVE THE OTHER PIPELINE.

B. NEW OR RELOCATED, UNDERGROUND WATER MAINS CROSSING ANY EXISTING OR PROPOSED PRESSURE–TYPE SANITARY SEWER, WASTEWATER OR STORM WATER FORCE MAIN, OR PIPELINE CONVEYING REUSE WATER SHALL BE LAID SO THE OUTSIDE OF THE WATER MAIN IS AT LEAST 12 INCHES, ABOVE OR BELOW THE OUTSIDE THE OTHER PIPELINE. HOWEVER, IT IS PREFERABLE TO LAY THE WATER MAIN ABOVE THE OTHER PIPELINE.

C. AT THE UTILITY CROSSINGS DESCRIBED IN PARAGRAPHS (A) AND (B) ABOVE, ONE FULL LENGTH OF WATER MAIN PIPE SHALL BE CENTERED ABOVE OR BELOW THE OTHER PIPELINE SO THE WATER MAIN JOINTS WILL BE AS FAR AS POSSIBLE FROM THE OTHER PIPELINE. ALTERNATIVELY, AT SUCH CROSSINGS, THE PIPES SHALL BE ARRANGED SO THAT ALL WATER MAIN JOINTS ARE AT LEAST THREE FEET FROM ALL JOINTS IN VACUUM–TYPE SANITARY SEWERS, STORM SEWERS, STORM WATER FORCE MAINS, OR PIPELINES CONVEYING REUSE WATER REGULATED UNDER PART III OF CHAPTER 62–610, F.A.C. AND AT LEAST SIX FEET FROM ALL JOINTS IN GRAVITY– OR PRESSURE–TYPE SANITARY SEWERS, WASTEWATER FORCE MAINS, OR PIPELINES CONVEYING REUSE WATER NOT REGULATED UNDER PART III OR CHAPTER 62–610, F.A.C.

WHERE THE HORIZONTAL CAN BEING LOCATED LESS THAT THE REQUIRED MINIMUM DISTANCES FROM JOINTS IN THE OTHER PIPELINE OR THE HORIZONTAL IS LESS THAT THREE FEET FROM ANOTHER PIPELINE OR THE UNDER GROUND WATER MAIN IS CROSSING ANOTHER PIPELINE AND IS LESS THAN THE REQUIRED MINIMUM VERTICAL DISTANCE FROM THE OTHER PIPELINE, THE CONTRACTOR SHALL CONTACT THE ENGINEER IMMEDIATELY FOR RECOMMENDED SOLUTIONS TO MEET THE FLORIDA OF DEPARTMENT OF ENVIRONMENTAL PROTECTION REQUIREMENTS PER CHAPTER 62–555, F.A.C.

PROTECTION OF POTABLE WATER SUPPLY NOTES

ENGINEERING STANDARDS 2019

REVISIONS				
BY	DATE	ENGINEERING DIVISION CITY OF POMPANO BEACH	POTABLE WATER SUPPLY NOTES	
S.S.	01/12	SCALE: N.T.S.		DATE: JAN. 2012 DWG. NO. 122-3

J:\City-STANDARDS\2019 Standards Details\Water 1-4.dwg, 11/2/2018 2:56:25 PM

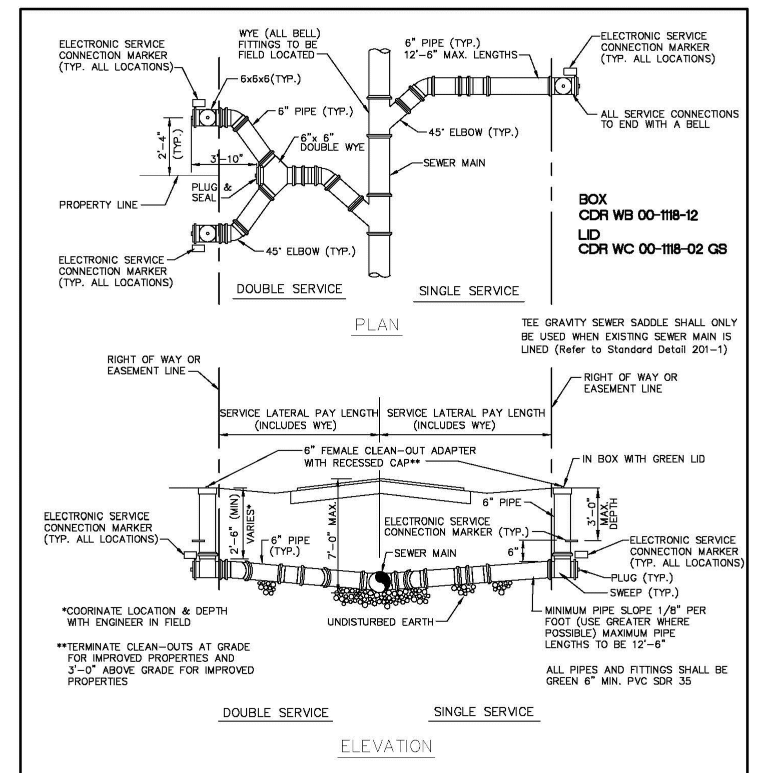

SHALLOW SERVICE LATERALS

ENGINEERING STANDARDS 2019

REVISIONS				
BY	DATE	ENGINEERING DIVISION CITY OF POMPANO BEACH	SERVICE LATERALS	
T.W.	11–2007			
S.S.	01/27/12			
S.S.	07/10/12			DATE: JUNE 1996 DWG. NO. 200-2
S.S.	02/10/16	SCALE: N.T.S.		

J:\City-STANDARDS\2019 Standards Details\Sanitary 2-1.dwg, 11/2/2018 1:56:27 PM

INLET: GASKETED BELL - SDR-35 PVC

Base Casting is ASTM A–48 Class 30 Cast Iron (Various Contours available to fit 6.275" – 30.00" O.D. Mains)

PVC Adapter is an ASTM D3034, SDR–35 Gasketed Bell

Castings and Adapter cemented permanently in place with two–part urethane adhesive

Base of Saddle dip–coated in Waterbased Bituminous Coating

Strap is 24 ga. X 2.5" wide Type 304 Stainless Steel

Strap Pins are .75" dia. Type 303 Stainless Steel

T–Bolts are .375" – 16 Type 304 Stainless Steel

Nuts and Washers are Type 18–8 Stainless Steel

O–Ring is ASTM C–361–77 Tubular Polyisoprene

4" inlet requires a 4" x 6.50" oval tap in the Sewer Main

6" inlet requires a 6" x 9.25" oval tap in the Sewer Main (Sewer Main must be at least 8" dia.)

Note: This Dwg. supercedes Dwg. No. R–3157–D1

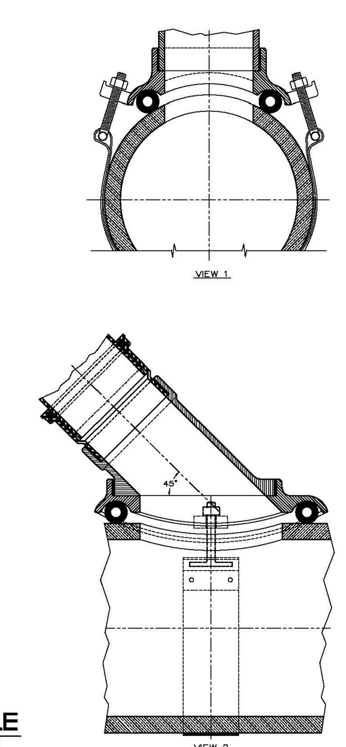

WYE GRAVITY SEWER SADDLE

TO BE USED WHEN A SEWER MAIN HAS BEEN LINED WITH A CURED IN PLACE MATERIAL.

ENGINEERING STANDARDS 2019

REVISIONS				
BY	DATE	ENGINEERING DIVISION CITY OF POMPANO BEACH	WYE GRAVITY SEWER SADDLE	
		SCALE: N.T.S.		DATE: NOV. 2016 DWG. NO. 201-2

J:\City-STANDARDS\2019 Standards Details\Sanitary 2-1.dwg, 11/2/2018 1:57:18 PM

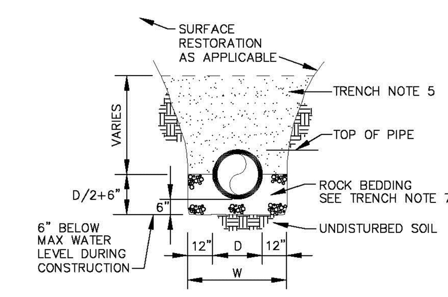

TRENCH BACKFILL / BEDDING CLASS "B"

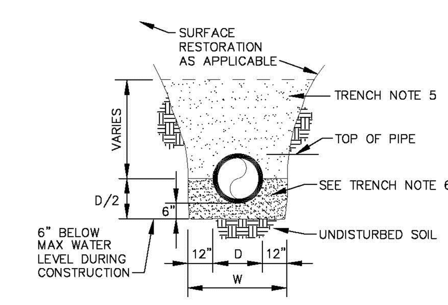

TRENCH BACKFILL / BEDDING CLASS "A"

ENGINEERING STANDARDS 2019

REVISIONS				
BY	DATE	ENGINEERING DIVISION CITY OF POMPANO BEACH	TRENCH BACKFILL / BEDDING	
S.S.	JUNE 2005	SCALE: N.T.S.		DATE: JUNE 1996 DWG. NO. 203-1

J:\City-STANDARDS\2019 Standards Details\Sanitary 2-1.dwg, 11/2/2018 1:59:06 PM

1. OUTLINE OF TRENCH EXCAVATION IS FOR ILLUSTRATIVE PURPOSES ONLY. ACTUAL TRENCH WIDTH AND SHAPE WILL VARY WITH SOIL CONDITIONS. TRENCH EXCAVATION SHALL BE IN ACCORDANCE WITH THE "FLORIDA TRENCH SAFETY ACT" AND OSHA TRENCH SAFETY STANDARDS.
2. TYPICAL TRENCH BACKFILL/BEDDING FOR WATER MAIN AND FORCE MAIN INSTALLATIONS SHALL BE CLASS "A" AS SHOWN IN DETAIL.
3. TYPICAL TRENCH BACKFILL/BEDDING FOR GRAVITY SEWER INSTALLATION SHALL BE CLASS "B" AS SHOWN IN DETAIL.
4. TRENCH BACKFILL/BEDDING CLASS "C" AND CLASS "D" SHALL BE USED FOR PIPE INSTALLATIONS WHERE UNSITABLE TRENCH MATERIALS ARE ENCOUNTERED.
5. TRENCH ZONE BACKFILL SHALL BE MATERIAL TYPE 1 OR TYPES A THRU H, OR ANY MIXTURE THEREOF, WHERE SURFACE RESTORATION TYPE "1" IS APPLICABLE, TRENCH ZONE BACKFILL SHALL BE PLACED IN 12" LIFTS, COMPACTED TO 90% OF THE MATERIAL'S MAXIMUM DENSITY AS DETERMINED BY ASTM D–697 (AASHTO T–99). WHERE SURFACE RESTORATION TYPES "2", "3" AND "4" ARE APPLICABLE, TRENCH BACKFILL SHALL BE PLACED IN 8" LIFTS COMPACTED TO 98% OF THE MATERIAL'S DENSITY AS DETERMINED BY ASTM D–698 (AASHTO T–99).
6. BEDDING MATERIAL FOR TYPICAL WATER MAIN AND FORCE MAIN INSTAL– LATION SHALL BE TYPE C. BEDDING SHALL BE COMPACTED TO 95% OF THE MATERIAL'S MAXIMUM DENSITY AS DETERMINED BY ASTM D–1557 (AASHTO T–180).
7. BEDDING MATERIAL FOR TYPICAL GRAVITY SEWER INSTALLATION AND ANY INSTALLATION WHERE UNSUITABLE TRENCH BOTTOM CONDITIONS ARE FOUND SHALL BE TYPE E. BEDDING SHALL BE PLACED IN LIFTS NOT TO EXCEED 6" AND COMPACTED TO 95% OF THE MATERIAL'S MAXIMUM DENSITY AS DETERMINED BY ASTM D–1557 (AASHTO T–180).
8. UNSUITABLE MATERIAL SHALL BE REMOVED TO UNDISTURBED ROCK OR SAND OR TO DEPTH AS SPECIFIED BY ENGINEER. BACKFILL MATERIAL SHALL BE TYPE C. BACKFILL SHALL BE PLACED IN 8" LIFTS COMPACTED TO 95% OF THE MATERIAL'S MAXIMUM DENSITY AS DETERMINED BY ASTM D–1557 AASHTO T–180).

TRENCH BACKFILL / BEDDING NOTES

ENGINEERING STANDARDS 2019

REVISIONS				
BY	DATE	ENGINEERING DIVISION CITY OF POMPANO BEACH	TRENCH BACKFILL / BEDDING	
		SCALE: N.T.S.		DATE: JUNE 1996 DWG. NO. 203-3

J:\City-STANDARDS\2019 Standards Details\Sanitary 2-1.dwg, 11/2/2018 2:01:00 PM

9. BEDDING TYPES – THE FOLLOWING TYPES OF SUITABLE MATERIALS ARE DESIGNATED AND DEFINED AS FOLLOWING:

TYPE A: CRUSHED LIMEROCK OR SAND WITH 100 PERCENT PASSING A 1 INCH SIEVE AND A SAND EQUIVALENT VALUE NOT LESS THAN 50.

TYPE B: CRUSHED LIMEROCK OR SAND WITH 100 PERCENT PASSING A 1/2 INCH SIEVE AND A SAND EQUIVALENT VALUE NOT LESS THAN 50.

TYPE C: SAND WITH 100 PERCENT PASSING A 3/8 INCH SIEVE, AT LEAST 90 PERCENT PASSING A NUMBER 4 SIEVE, AND A SAND EQUIVALENT VALUE NOT LESS THAN 30.

TYPE D: CRUSHED LIMEROCK WITH 100 PERCENT PASSING A 1 INCH SIEVE AND NOT MORE THAN 10 PERCENT A NUMBER 4 SIEVE.

TYPE E: CRUSHED LIMEROCK OR SAND WITH 100 PERCENT PASSING A 3/4 INCH SIEVE AND NOT MORE THAN 10 PERCENT PASSING A NUMBER 4 SIEVE.

TYPE F: CRUSHED LIMEROCK MEETING THE FOLLOWING GRADATION REQUIRE– MENTS.

SIEVE SIZE	PERCENTAGE PASSING
2 INCH	100
1–1/2 INCH	90–100
1 INCH	20–55
3/4 INCH	0–15
NO. 200	0–3

TRENCH BACKFILL / BEDDING NOTES

ENGINEERING STANDARDS 2019

REVISIONS				
BY	DATE	ENGINEERING DIVISION CITY OF POMPANO BEACH	TRENCH BACKFILL / BEDDING	
		SCALE: N.T.S.		DATE: JUNE 1996 DWG. NO. 203-4

J:\City-STANDARDS\2019 Standards Details\Sanitary 2-1.dwg, 11/2/2018 2:01:27 PM

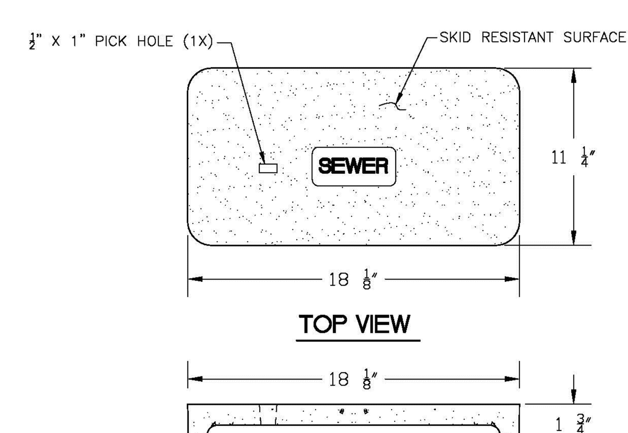

NOTE

1. MATERIAL: FIBERGLASS REINFORCED POLYMER CONCRETE & FIBERGLASS REINFORCED POLYMER
2. COLOR: GREEN
3. LOAD RATING: A8 (ASTM C857)
4. LOGO: SEWER

SEWER BOX AND COVER

PRODUCT RATING - NON TRAFFIC						
		DESIGN LOADS			TESTING	
LOAD DESIGNATION	DESCRIPTION	LIVE LB/WHEEL (2)	LIVE + IMPACT LB/WHEEL	SIDE PSF (3)	LOAD,LBS	SAFETY FACTOR
AASHTO H10	LIGHT TRUCK TRAFFIC	8,000	10,400	N/A	22,568 (4)	2.82

ENGINEERING STANDARDS 2019

REVISIONS				
BY	DATE	ENGINEERING DIVISION CITY OF POMPANO BEACH	SEWER BOX AND COVER CDR Part No. WB03-1118-12 CDR Part No. WC00-1118-02	
		SCALE: N.T.S.		DATE: AUGUST 2007 DWG. NO. 210-1

J:\City-STANDARDS\2019 Standards Details\Sanitary 2-2.dwg, 11/2/2018 2:07:26 PM

DATE:

REVISIONS:

Eric Gomez, PE

Digitally signed by Eric Gomez, PE
Date: 2024.05.14 08:06:49 -04'00'

CERTIFICATION: ERIC J. GOMEZ LICENSE No. 57461 STATE OF FLORIDA PROFESSIONAL ENGINEER

DESIGNED BY: EG

DRAWN BY: MP

CHECKED BY: EG

SCALE: AS SHOWN

EGSC ENGINEERING CONSULTANTS
Personal Approach, Powerful Results

DRAWING NAME: WATER AND SEWER DETAILS

PROJECT: SINGLE FAMILY UNIT
FOLIO: 484227000780 POMPANO BEACH, FL 33069

PREPARED BY: EGSC ENGINEERING CONSULTANTS
1701 NW 112th AVENUE #103 MIAMI, FL 33172
TEL: 305.553.5457 EMAIL: egomez@egscfl.com

SHEET: C-4.0